Palco

Design Artec Studio | **iGuzzini**

Last information update: October 2024

Product configuration: MJ92
MJ92: Medium body spotlight - neutral white - electronic ballast and dimmer - flood optic

Product code
MJ92: Medium body spotlight - neutral white - electronic ballast and dimmer - flood optic

Technical description
Adjustable spotlight with adapter for installation on mains electrified track for high output LED lamp with monochrome emission in a Neutral White (4000K) tone. Flood optic (30-35°). Dimmable electronic ballast integrated in the product. Luminaire made of die-cast aluminium and thermoplastic material, allows 360° rotation about the vertical axis and 90° tilting relative to the horizontal plane. The luminaire has mechanical aiming locks for both movements, operated using the same tool on two screws, one at the side of the rod and one on the adapter for the track. Passive heat dissipation. Spotlight designed to contain up to two flat accessories simultaneously. Another external component can also be applied, selected from directional flaps and an anti-glare screen. All external accessories rotate 360° about the spotlight longitudinal axis.

Installation
On an electrified track

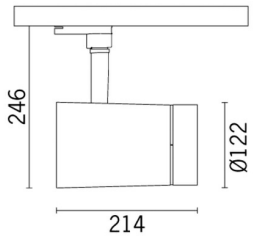

Colour
White (01) | Black (04)

Weight (Kg)
2.12

Mounting
three circuit track

Wiring
Electronic components housed in the luminaire

Complies with EN60598-1 and pertinent regulations

IP20

Technical data

lm system:	3354
W system:	31.3
lm source:	4300
W source:	29
Luminous efficiency (lm/W, real value):	107.2
lm in emergency mode:	-
Total light flux at or above an angle of 90° [Lm]:	0
Light Output Ratio (L.O.R.) [%]:	78
Beam angle [°]:	30°
CRI (minimum):	80
Colour temperature [K]:	4000

MacAdam Step:	2
Life Time LED 1:	> 50,000h - L90 - B10 (Ta 25°C)
Lamp code:	LED
Number of lamps for optical assembly:	1
ZVEI Code:	LED
Number of optical assemblies:	1
Power factor:	See installation instructions
Inrush current:	22 A / 260 µs
Maximum number of luminaires of this type per miniature circuit breaker:	B10A: 15 luminaires B16A: 24 luminaires C10A: 24 luminaires C16A: 40 luminaires
Overvoltage protection:	2kV Common mode & 1kV Differential mode
Control:	Completo di dimmer

Polar

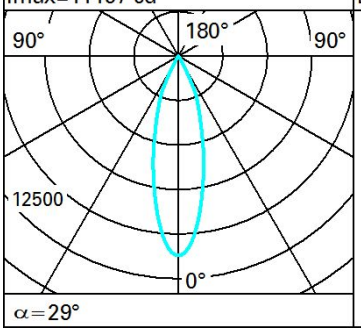

Lux

h	d	Em	Emax
2	1	2104	2799
4	2.1	526	700
6	3.1	234	311
8	4.1	131	175

Isolux

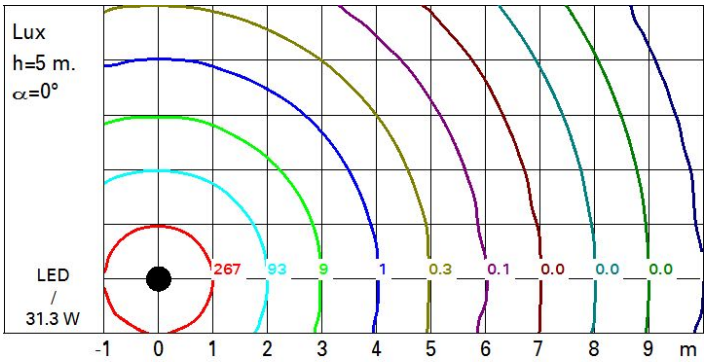

UGR diagram

Corrected UGR values (at 4300 lm bare lamp luminous flux)

Riflect.:											
ceil/cav		0.70	0.70	0.50	0.50	0.30	0.70	0.70	0.50	0.50	0.30
walls		0.50	0.30	0.50	0.30	0.30	0.50	0.30	0.50	0.30	0.30
work pl.		0.20	0.20	0.20	0.20	0.20	0.20	0.20	0.20	0.20	0.20
Room dim		viewed					viewed				
x	y	crosswise					endwise				
2H	2H	7.0	7.5	7.2	7.7	8.0	7.0	7.5	7.2	7.7	8.0
	3H	6.9	7.4	7.2	7.6	7.9	6.9	7.3	7.2	7.6	7.9
	4H	6.8	7.3	7.1	7.5	7.8	6.8	7.2	7.1	7.5	7.8
	6H	6.7	7.1	7.1	7.5	7.8	6.7	7.1	7.1	7.4	7.8
	8H	6.7	7.1	7.0	7.4	7.7	6.7	7.1	7.0	7.4	7.7
	12H	6.6	7.0	7.0	7.4	7.7	6.6	7.0	7.0	7.4	7.7
4H	2H	6.8	7.2	7.1	7.5	7.8	6.8	7.3	7.1	7.5	7.8
	3H	6.7	7.1	7.0	7.4	7.7	6.7	7.1	7.0	7.4	7.7
	4H	6.6	6.9	7.0	7.3	7.7	6.6	6.9	7.0	7.3	7.7
	6H	6.5	6.8	6.9	7.2	7.6	6.5	6.8	6.9	7.2	7.6
	8H	6.5	6.7	6.9	7.1	7.6	6.5	6.7	6.9	7.1	7.6
	12H	6.4	6.7	6.9	7.1	7.5	6.4	6.7	6.9	7.1	7.5
8H	4H	6.5	6.7	6.9	7.1	7.6	6.5	6.7	6.9	7.1	7.6
	6H	6.4	6.6	6.8	7.0	7.5	6.4	6.6	6.8	7.0	7.5
	8H	6.3	6.5	6.8	7.0	7.5	6.3	6.5	6.8	7.0	7.5
	12H	6.3	6.4	6.8	6.9	7.4	6.3	6.4	6.8	6.9	7.4
12H	4H	6.4	6.7	6.9	7.1	7.5	6.4	6.7	6.9	7.1	7.5
	6H	6.3	6.5	6.8	7.0	7.5	6.3	6.5	6.8	7.0	7.5
	8H	6.3	6.4	6.8	6.9	7.4	6.3	6.4	6.8	6.9	7.4

Variations with the observer position at spacing:

S =	1.0H	5.8 / -9.5	5.8 / -9.5
	1.5H	8.6 / -11.8	8.6 / -11.8
	2.0H	10.6 / -13.0	10.6 / -13.0