Platea Pro

Design Jean-Michel Wilmotte **iGuzzini**

Last information update: December 2024

Product configuration: P832
P832: Platea Pro

Product code
P832: Platea Pro

Technical description
Outdoor luminaire with a SuperSpot optic, designed to use RGBW LED lamps. Made up of an optical assembly with a base and an aluminium alloy frame. The painting stage consists of a primer and a liquid acrylic paint, cured at 150 °C, with a high level of weather and UV ray resistance. With a 5 mm thick colourless transparent tempered sodium-calcium glass cover. The product can be tilted by +5°/-90° around the vertical plane with a 10° step graduated gauge and fitted with mechanical blocks that guarantee stable aiming of the beam of light. Horizontal aiming is performed using the slots in the base, which allow an ±30° adjustment. High visual comfort. Polymer optic lenses offering high yield and even light distribution. Circuit complete with single chip RGBW (Red, Green, Blue and White) LEDs and a DMX512-RDM electronic control driver. Extractable control gear connected with quick-coupling connectors. 220-240V ac 50/60Hz DALI electronic ballast. Replaceable control gear. All the screws used are made of A2 stainless steel.

Installation
The luminaire can be installed at ground level or on walls using the standard base.

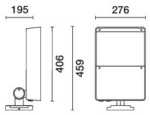

Colour	Weight (Kg)
White (01) | Black (04) | Grey (15) | Rust Brown (F5)	8.6

Mounting
wall arm|wall surface|ground anchored

Wiring
Luminaire ready for pass-through wiring. Product perfect watertightness at the power cable entry point is guaranteed by 2 nickel-plated brass M24x1.5 cable clamps, suitable for cables with a max external 14mm ø (1.5mm² cross section). Push in terminal board.

Notes
Available accessories include: a refractor for elliptical light flow distribution, diffusing glass, visor, directional flaps, protective grille .

Complies with EN60598-1 and pertinent regulations

IK08 IP66

Technical data

lm system:	2477	Life Time LED 1:	100,000h - L80 - B10 (Ta 25°C)
W system:	43.8	Voltage [Vin]:	230
lm source:	3590	Lamp code:	LED
W source:	37	Number of lamps for optical assembly:	1
Luminous efficiency (lm/W, real value):	56.5	ZVEI Code:	LED
lm in emergency mode:	-	Number of optical assemblies:	1
Total light flux at or above an angle of 90° [Lm]:	0	Intervallo temperatura ambiente:	from -30°C to 35°C.
Light Output Ratio (L.O.R.) [%]:	69	Power factor:	See installation instructions
Beam angle [°]:	12°	Inrush current:	40 A / - µs
CRI (typical):	82	Control:	DMX-RDM
Colour temperature [K]:	RGBW - 4000K		

Polar

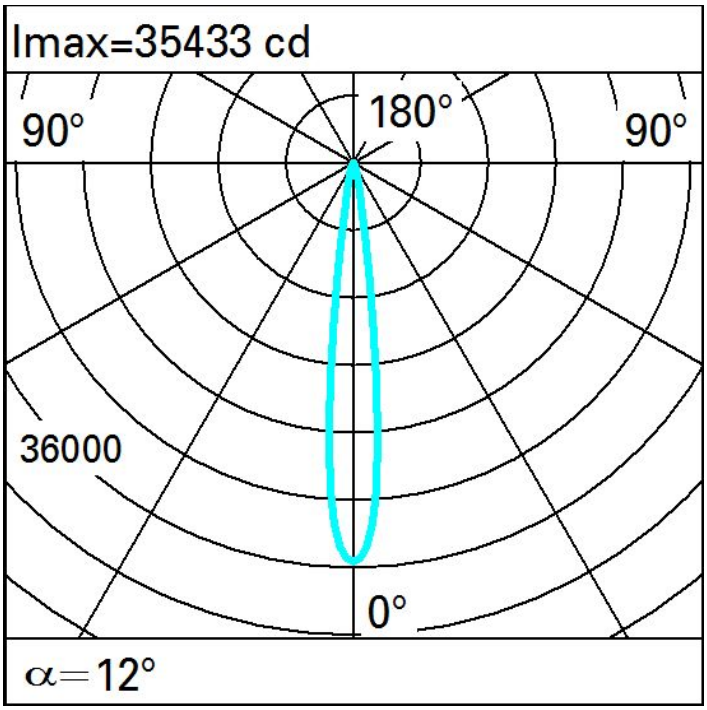

Isolux

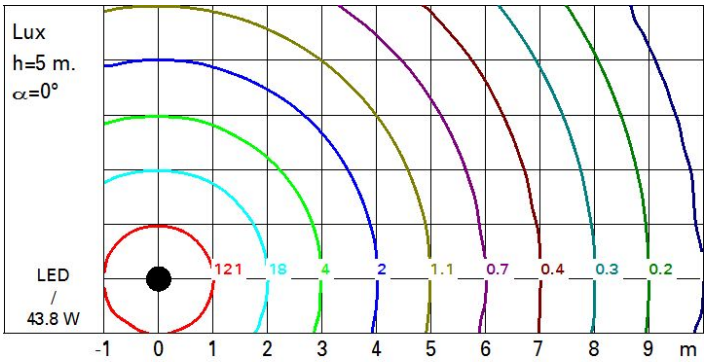
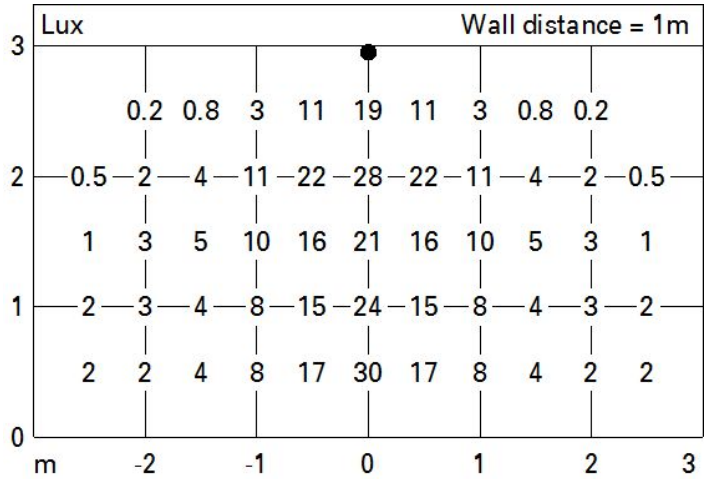
Illuminances